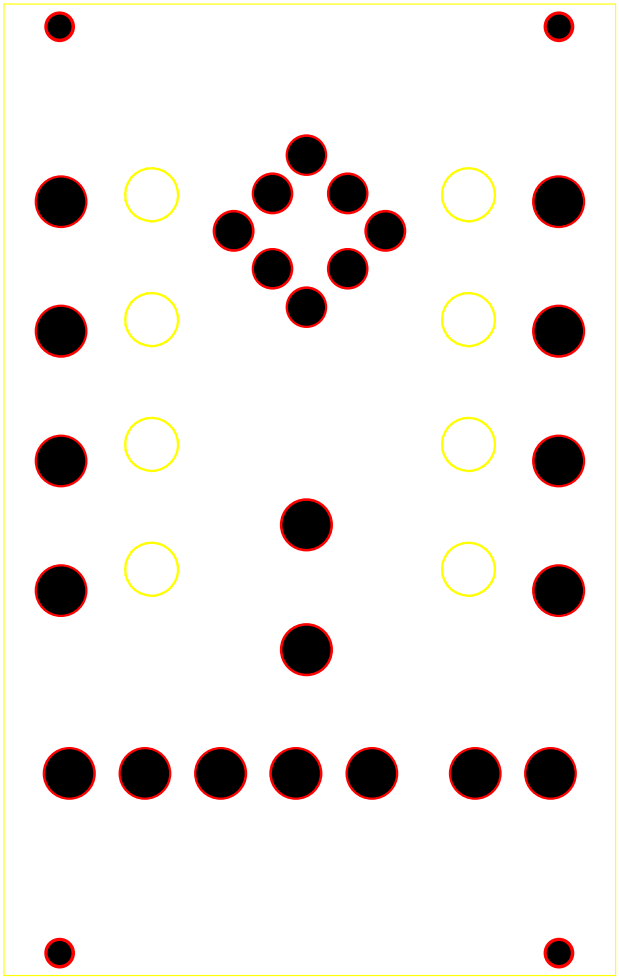

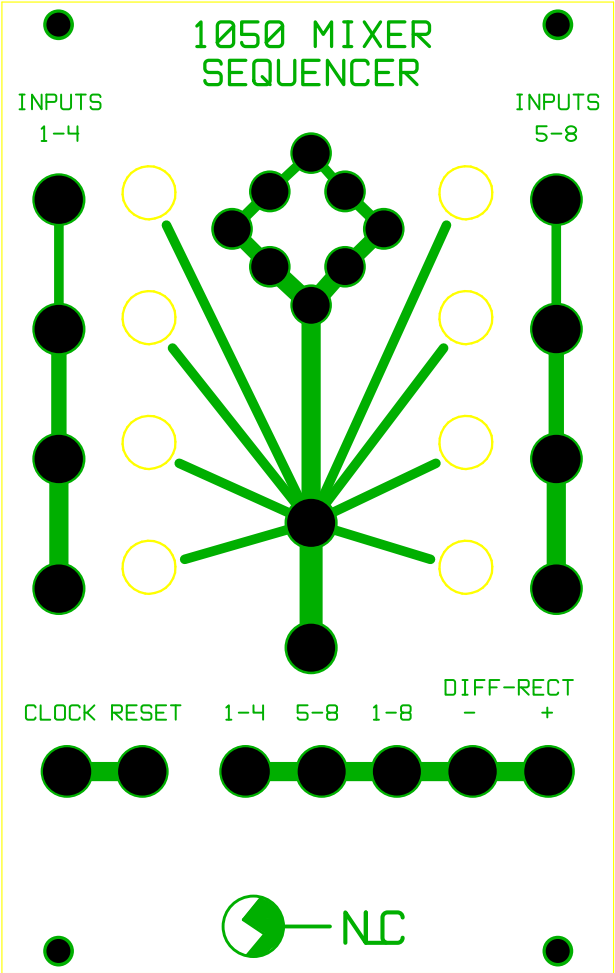
1050 MIXER
SEQUENCER
INPUTS
1-4
INPUTS
5-8
CLOCK
RESET
1-4
5-8
1-8
DIFF-RECT
-
+
NLC